ABHIYANTRIKI
An International Journal of Engineering & Technology
(A Peer Reviewed & Indexed Journal)
Vol. 2, No. 10 (October, 2015) http://www.aijet.in/ eISSN: 2394-627X

Simulation of AC Voltage Controller Control Strategies using PROTEUS

M. Narayanan*
Assistant Professor
Info Institute of Engineering, Coimbatore,
Tamil Nadu, India

S. Vignesh
UG EEE Student
Info Institute of Engineering, Coimbatore,
Tamil Nadu, India

V. K. Aravind
UG EEE Student
Info Institute of Engineering, Coimbatore,
Tamil Nadu, India

K. Karthika
UG EEE Student
Info Institute of Engineering, Coimbatore,
Tamil Nadu, India

R. M. Karthika
UG EEE Student
Info Institute of Engineering, Coimbatore, Tamil Nadu, India

Abstract

AC voltage controller is a power electronic circuit used to convert fixed voltage fixed frequency ac supply to variable voltage fixed frequency ac supply. To control the RMS output voltage different control strategies are used. Hence in this paper study of various control strategies is simulated using PROTEUS software.

Keywords*: AC – AC Voltage Controller, Control Strategies, PROTEUS Software.*

****Author for correspondence*** nareshinfo12@gmail.com

1. Introduction

AC voltage controller or ac chopper or ac voltage regulator play a vital role Industrial heating, Speed control of induction motor, Industrial lighting, on load tap changing transformers, soft start of induction motors, ac magnet controls, etc., The most commonly used power electronic circuit for controlling the ac voltage is using two SCR's connected in anti-parallel between source and load. The control strategy depends upon the gate pulse given to the SCR's [1].

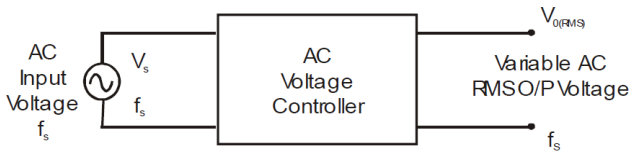

AC Voltage Controller

The control strategies available to control the output voltage are [2]:
a) On – Off cycle control
b) Phase angle control

c) Integral cycle switching control

Two important voltage control techniques are commonly used for heating power control in ac power controller are Phase Control Switching or Phase angle control (PCS) and Integral Cycle Control or ON - OFF control (ICC). In case that PCS is used for resistive load, it can produce higher order harmonics and heavy inrush current while switching on in a cold start. In ICC frequency contained is variable and smooth voltage control is not possible and output voltage control is not continuous. To remove the disadvantage of both the method and have advantage of both methods a new method termed as Integral Switching Cycle Control (ISCC) for heating application is proposed [2].

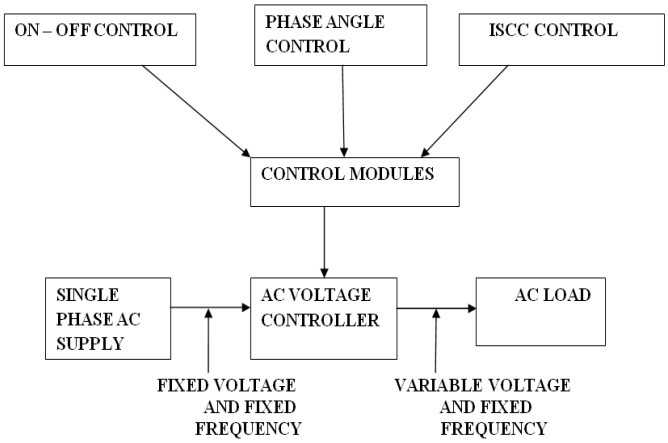

Fig 1: Block diagram of AC Voltage Controller

2. AC Voltage Controller

Fig 1: shows the block diagram of ac voltage controller. To vary the output voltage rms we may opt any one of the above said control strategies. The circuit diagram for single phase ac voltage controller is shown in the Fig. 2. To control both the positive and negative half cycles two SCR's connected in anti-parallel and so the circuit is said to be bidirectional controller. Instead of two SCR's a TRIAC can be also used.

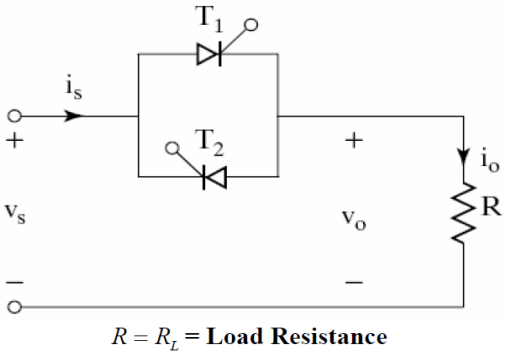

Fig 2: Circuit Diagram

3. PROTEUS Simulation Result

Proteus is a circuit analysis and physical simulation software launched by British Lab Center Company, which run on Windows platform and is made up mainly by the ISIS and ARES. The purpose of this software is to conduct an interactive simulation with a microcontroller using Proteus [5]. Design of a circuit using PROTEUS helps to prevent flaws during design, component rating selection, connection sequence and therefore saves money and time.

The above simulation circuit contains the following modules:

a) Power supply
b) Triac based ac voltage controller
c) Opto coupler
d) Gate drive circuits
e) PIC controller
f) Scope and voltmeter

SN	Parameter	Specification
1	Input supply	230 V, 50 Hz ac
2	Triac	Q2025R5
3	Opto coupler	MOC3021
4	Switch	SPST, DIP Switch
5	Transistor	2N3904
6	Controller	PIC16F877A
7	Voltmeter	AC
8	Display unit	Scope

Table 1: Simulation Parameters

The simulation diagram is shown in Fig. 3: uses PIC microcontroller 16F877A for generating triggering pulses for the TRIAC. Opto – isolator or opto – coupler is used to transfer electric signals between two isolated circuits using light.

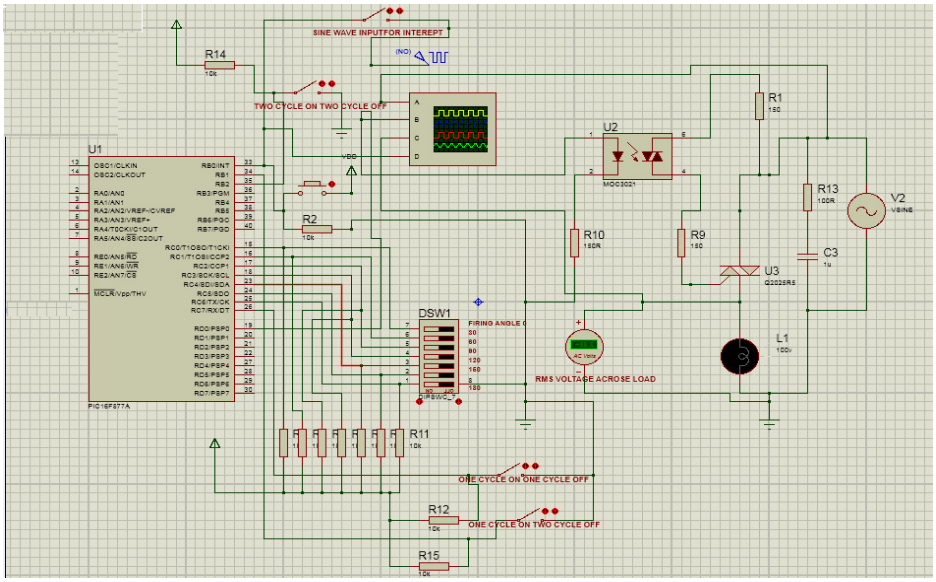

Fig 3: Proteus simulation of AC voltage controller

From [3], it is concluded that %THD is low for ISCC control. It also gives comparison tables for R and RL load to validate the result. Hence in this paper, comparison of rms output voltage of ISCC control using MATLAB and PROTEUS is carried out shown in Table 2: For Phase angle control the values are tabulated in [4].

Firing angle α (deg)	RMS output voltage (V)		
	Theoretical value	Matlab	Proteus
30	34.78	34.3	35.02
60	31.67	31.6	32.1
90	24.95	24.62	25.3
120	15.48	15.13	15.7

Table 2: Comparison of output voltage rms for ISCC control

From Table 2: it is clear that output voltage rms obtained through PROTEUS simulation for ISCC control is approximately equal with the values obtained with MATLAB simulation and theoretical calculation.

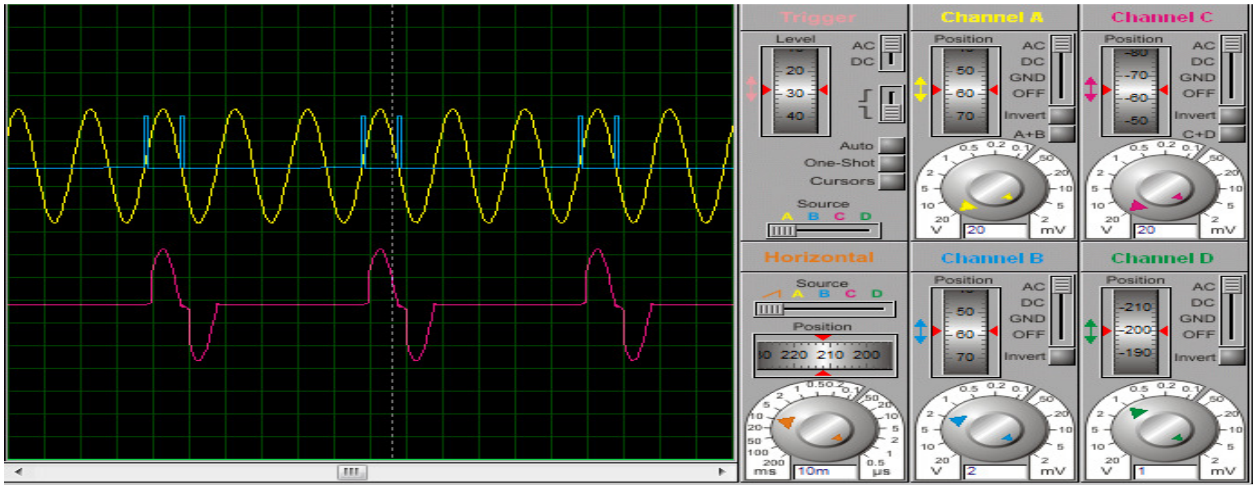

Fig 4: One ON – two OFF cycle control

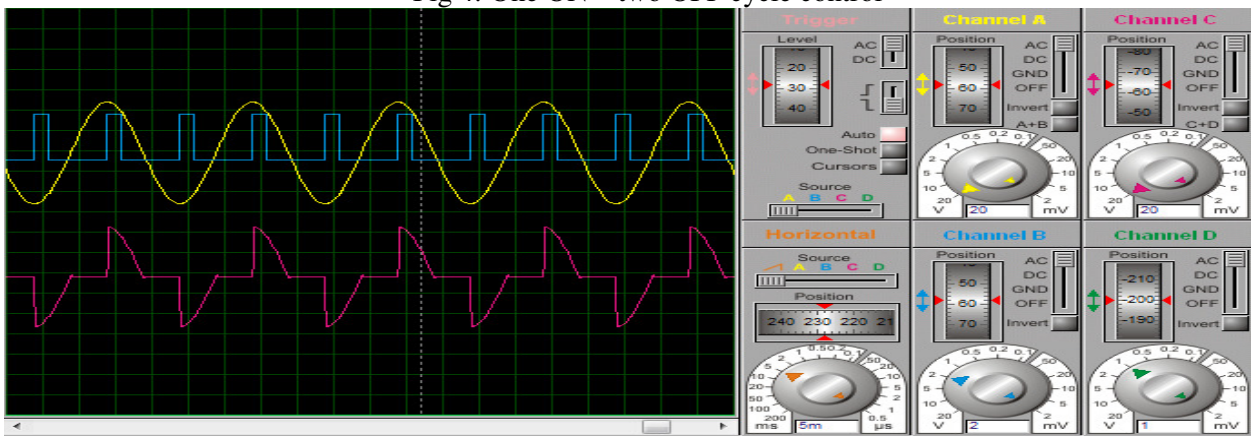

Fig 5: Phase angle control for alpha = 90 degrees

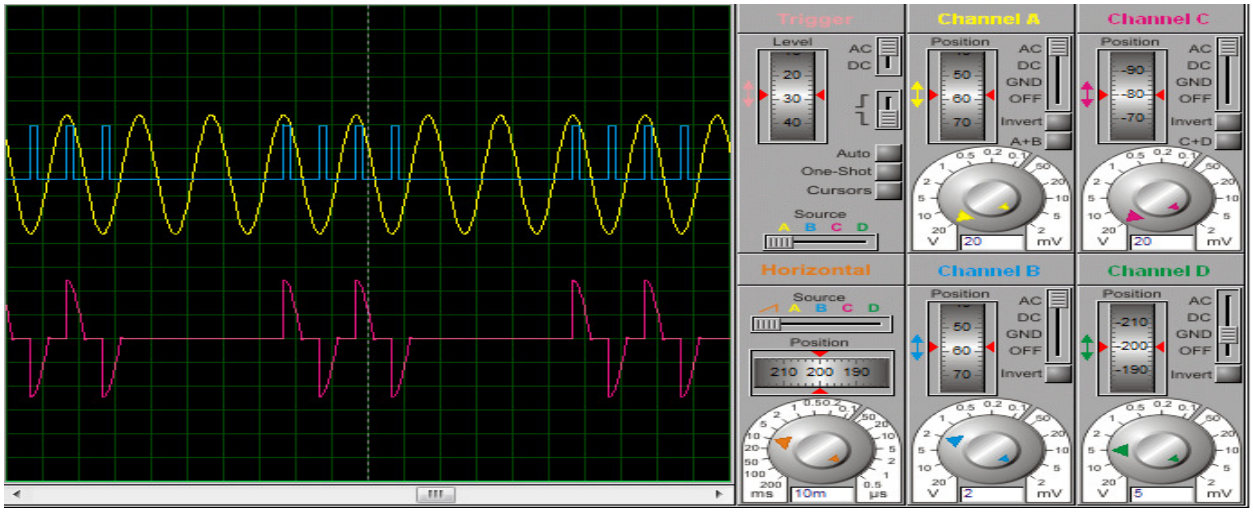

Fig 6: ISCC for duty cycle = 0.5, alpha = 90 degrees

4. Conclusion

Simulation using MATLAB can produce similar results but it does not provide any idea for generating clock pulse or triggering pulse for real time implementation. The use of PROTEUS simulation one can understand the use of PIC controller along with all the necessary modules to implement the ideas obtained through simulation real time. Thus the use of PROTEUS software proves its worth efficient.

References

[1] M. Narayanan, R. Vidhya, D. Velmurugan and S. Siva "A Review of all possible control strategies for AC voltage controller," ABHIYANTRIKI: An International Journal of Engineering & Technology (A Peer Reviewed & Indexed Journal), Vol. 3, No. 1, Jan. 2016.

[2] Dharmesh V. Khakhkhar, "Design and Simulation of Novel Integral Switching Cycle Control for Heating Load," International Journal of Emerging Trends in Electrical and Electronics, Vol. 5, Issue 1, July, 2013.

[3] M. Narayanan, R. M. Karthika, K. Karthika, V. K. Aravind and S. Vignesh, "Comparative Study of Control Strategies of AC Voltage Controller", International Journal of Electrical Engineering, Vol. 3, Issue 11, November, 2015.

[4] M. Narayanan, P. Yuvaraj, R. Vidhya, and S. Lakshmi Narayana Moorthy, "Simulation of AC Voltage Controller Using Matlab And Proteus", International Research Journal of Engineering and Technology, Vol. 2, Issue 9, December, 2015.

[5] Fengjie Wu and Tangmei He, "Application of Proteus in Microcontroller Comprehensive Design Projects", International Journal of Instrumentation, Measurements, Circuits and Systems, pp 363 – 369.