ABHIYANTRIKI
An International Journal of Engineering & Technology
(A Peer Reviewed & Indexed Journal)
Vol. 3, No. 4 (April, 2016) http://www.aijet.in/ eISSN: 2394-627X

Performance Analysis of Optical Communication System in the Presence of FWM under the Impact of Channel Spacing in a DWDM Network

Nisha Rani
Bachelor of Technology
Deptt. of Elec. & Instrumentation Engineering
GIET, Gunupur, Rayagada, Odisha, India

Sandhya Kalindi*
Bachelor of Technology
Deptt. of Elec. & Instrumentation Engineering
GIET, Gunupur, Rayagada, Odisha, India

Tusarkant Panda
Assistant Professor
Deptt. of Elec. & Instrumentation Engineering
GIET, Gunupur, Rayagada, Odisha, India

Abstract

The integration of networks is a potential solution for the increasing capacity and mobility as decreasing costs in the accessing of networks. Optical networks are fast, robust and error free, however, there are nonlinearity obstacles preventing them from becoming perfect. The performance of wavelength division multiplexing (WDM) in radio over fiber systems is found to be strongly affected by nonlinearity characteristics inside the fiber. Radio over fiber technology and wireless and fiber optic networks is an essential technology for the provision of un-tethered across to broadband wireless solutions, of existing radio coverage and backhaul. The advantages of an optical fiber as a transmission medium such as low loss, lightweight, large bandwidth cable cost make it the ideal and most flexible solution for efficiently transporting signals to remotely present antenna sites in a wireless network. The effect of four wave mixing (FWM) as one of the influential factors in the WDM for has been studied here using optical system and MATLAB. From the results obtained, it is found that the effects have become significant at higher power levels and have become even more significant when the strength of the optical transmission line is highly increased, which has been done by either enhancing the channel bit rate, and reducing the channel width, or by the combination of both process.

Keywords*: FWM, DWDM network.*

****Author for correspondence*** kalindisandhya364@gmail.com

1. Introduction

In the past, dating back to the beginning of the human civilization, communication was done through signals, voice or primitive forms of writing and gradually developed to use signaling lamps, flags, and other semaphore tools. As time passed by, the need for communication through

distances, to pass information from one place to another, became necessary and the invention of telegraphy brought the world into the electrical-communication. The major revolution that affected the world however was the invention of the telephone in 1876. This event has drastically transformed the development of communication technology. Today's long distance communication has the ability to transmit and receive a large amount of information in a short period of time. Since the development of the first-generation of optical fiber communication systems in the early 80's [4], the optical fiber communication technology has developed fast to achieve larger transmission capacity and longer transmission distance, to satisfy the increased demand of computer network. Since the demand on the increasing system and network capacity is expected, more bandwidth is needed because of the high data rates application, such as video conference and real-time image transmission, and also to achieve affordable communication for everyone, at any time and place. The communication capabilities allow not only human to human communication and contact, but also human to machine and machine to machine interaction. The communication will allow our visual, audio, and touch sense, to be contacted as a virtual 3-D presence. To keep up with the capacity increasing requirement, new devices and technologies with high bandwidth are greatly needed by using both electronic and optical technologies together to produce a new term Radio over Fiber (RoF). The progress made so far has been impressive, where information rate at 1 terabits/s can be handled by a single fiber. RoF is a technology used to distribute RF signals over analog optical links. In such RoF systems, broadband microwave data signals are modulated onto an optical carrier at a central location, and then transported to remote sites using optical fiber. The base-stations then transmit the RF signals over small areas using microwave antennas and such a technology is expected to play an important role in present and future wireless networks since it provides an end user with a truly broadband access to the network while guaranteeing the increasing requirement for mobility. In addition, since it enables the generation of millimeter-wave signals with excellent properties, and makes effective use of the broad bandwidth and low transmission loss characteristics of optical fibers, it is a very attractive, cost-effective and flexible system configuration.

2. Four Wave Mixing

In the dating back to the beginning of the communication was done through signals, voice or primitive forms of writing and gradually developed to use, flags, and other semaphore tools. As time passed by, the need for communication through distances pass information from one place to become necessary and the invention of telegraphy brought the world. This event has transformed the development of communication technology. Today's long distance has the ability to transmit and receive a large amount of information. Since the development of optical fiber communication systems, the optical fiber communication developed fast to achieve larger transmission capacity and longer transmission distance, to satisfy the increased demand. Since the demand on the increasing system and network capacity is expected, more bandwidth is

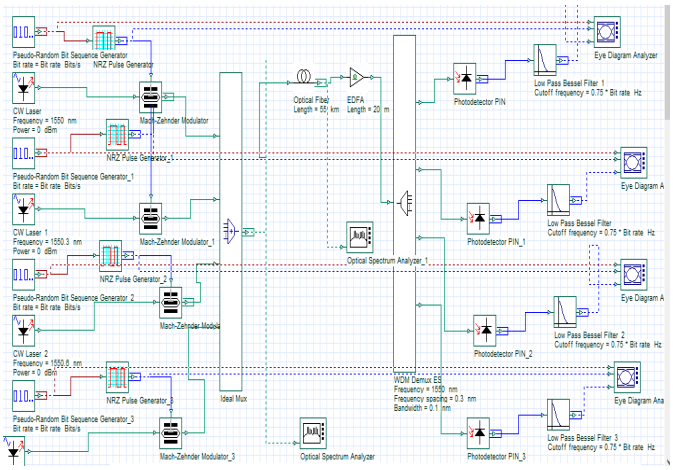

Fig. 1: FWM Simulation Model Layout

needed because of the high data rates application, such as video, image transmission, and also to achieve affordable communication for everyone, at anytime and place. The communication capabilities allow not only human to human, but also human to machine interaction, small or the chromatic dispersion of the fiber is low. Thus, it is possible to minimize the effects of FWM by increasing the channel spacing and the chromatic dispersion of the fiber.

3. Simulation and Result

In the FWM simulation model layout, two types of visualiser tools have been used. The optical spectrum analyzer and the WDM analyzer were fixed after MUX and at the end of the fiber optic. The results obtained after the multiplexer are same as the input power level shown before the nonlinear effect. The nonlinear effect occurs only during the propagation of signals through the fiber. The optical spectrum analyzer has been used to show the waveform whereby the WDM analyzer has been used to display signal power (dBm), noise power (dBm) and OSNR (dB).

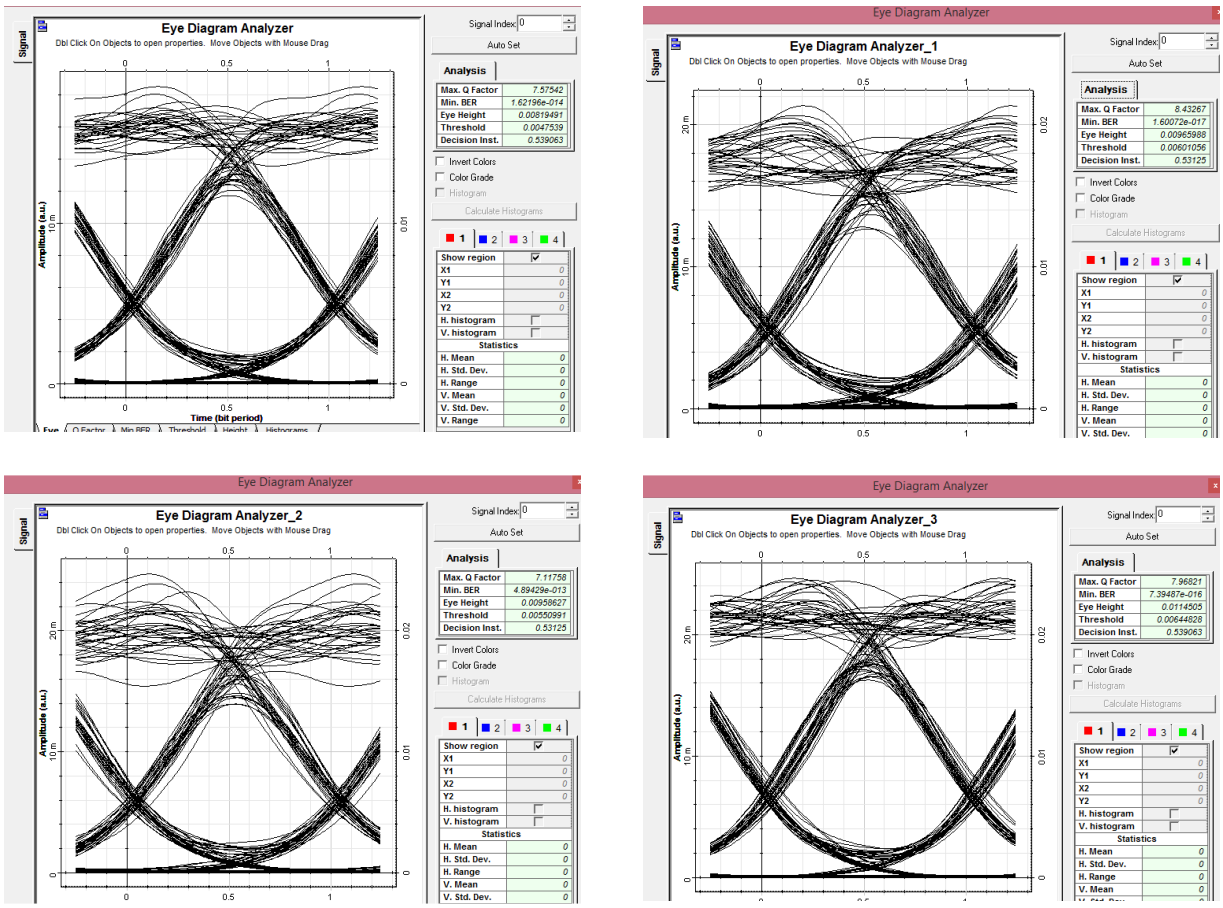

Fig 2: Eye Diagram of FWM Simulation

4. Conclusion

Future wireless systems it will be targeting towards providing broadband access and personal area multimedia services to large number of subscribers. Radio over Fiber (RoF) network accompanied with wavelength division multiplexing (WDM) can provide a simple topology, easier network management, and an increased capacity by allocating different wavelengths to individual remote nodes. The performance of WDM networks is strongly influenced by

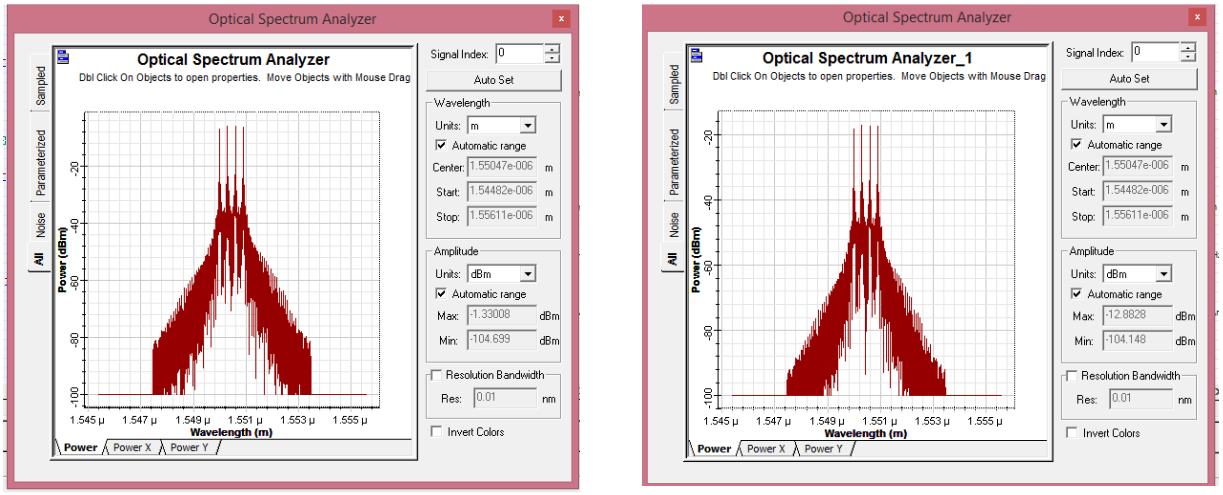

Before passing through channel After passing through channel

Fig 3: Spectrum Analyser

nonlinearity characteristic inside the fiber. Therefore the nonlinearity effects of fiber optics pose additional limitation in WDM systems. It is well known that FWM in WDM for RoF signals are mostly generated by non-degenerate FWM process regardless of the number of input signals. In this study only two and four input signals were launched into the optical fiber. The FWM effect has been investigated analytically and numerically simulated. Simple equations to determine the spectral line width, the FWM power due to channel spacing and the power of the FWM components due to the input power have been deduced. The numerical simulation results obtained have shown the spectral characteristics of the FWM in WDM for RoF where the effects of FWM are pronounced with decreased channel spacing of wavelengths or at high signal power levels.

References

[1] Hamed Al-Raweshidy. Radio over Fiber Technologies for Mobile Communications Networks. Artech House, 2002.

[2] Guo, Y., Kao, CK, & Chiang, KS. Nonlinear photonics: nonlinearities in optics, optoelectronics and fiber communications. Springer-Verlag: Berlin, Germany. 2002.

[3] GP Agrawal. Fiber-Optic communication system. McGraw-Hill. 2001.

[4] Robert, CE. Optical Networking: A beginner's guide. McGraw- Hill/Osborne. 2004.

[5] Yannis, LG. New optical Microwave Up-Conversion Solution in Radio over Fiber Network. *Journal of Lightwave Technology*. 24(3), pp. 1277- 1282.

[6] Antti Lamminpää. Measurement of nonlinearity of optical fiber [Master thesis]. Helsinki University of Technology, 2003.

[7] D. Marcuse. (1991). Effect of Fiber Nonlinearity on Long-Distance Transmission. Journal of Lightwave Technology. 9(1), pp. 121-128.

[8] Remigius Zengerle. Modeling of Nonlinear Phenomena in Optical Multichannel Transmission system [Master thesis]. University of Kaiserslautern, 2005.

[9] AV Yulin et al. Four-wave mixing of linear waves and solitons in fibers with higher-order dispersion. *Journal of Lightwave Technology*. 29(3), pp. 950-955.

[10] Ajung Kim, Young Hun Joo, & Yungsoo Kim. 60GHz Wireless Communication Systems with Radio-over-Fiber Links for Indoor Wireless LANs. *Jour. of Lightwave Tech.* 20(4), pp. 517-521.

[11] Anthong No'oma. Radio over Fiber Technology for Broadband wireless communication systems [Master thesis]. Eindhoven University of Technology, 2005.