ABHIYANTRIKI
An International Journal of Engineering & Technology
(A Peer Reviewed & Indexed Journal)
Vol. 3, No. 4 (April, 2016) http://www.aijet.in/ eISSN: 2394-627X

Wheat Flour Mill Cyclone Separator: A Literary Review

Konal Singh*
Student
Department of Mechanical Engineering
St. Vincent Pallotti College of Engineering & Technology, Nagpur, Maharashtra, India

Tushar Wanjari
Student
Department of Mechanical Engineering
St. Vincent Pallotti College of Engineering & Technology, Nagpur, Maharashtra, India

Abstract

Cyclone is the most commonly used device, to separate dust particles from gas and dust flow. This review paper provides a wide perspective of various designed cyclone separator for collection of tiny dust particle. A review of the literature was undertaken to discover recent particulate control technology developments in other industries that may benefit the flour mill. This inter-disciplinary literature review summarizes, scenario of silicosis disease on mill worker, measurement of particle size, effect and characteristics of flour particle and dust cyclone designs. As manufacturing costs have decreased and model sophistication has increased, the use of cyclone in flour mill is appropriate and its gives a better performance. There will, however, always be a need for empirical validation in the laboratory and field. Energy cost, related to cyclone pressure drop; has been and will continue to be an important consideration in the field of research and development.

Keywords*: Cyclone separator, Operating parameters, Tangential inlet.*

****Author for correspondence*** singhkonal@gmail.com

1. Introduction

Cyclone separators, provide a method of removing particulate matter from air streams at low cost and low maintenance. There are a number of different forms of cyclone separator; but the most common design used industrially is the reverse flow cyclone. In general, a cyclone consists of an upper cylindrical part referred to as the barrel and a lower conical part referred to as the cone (Fig. 1). The air stream enters tangentially at the top of the barrel and travels downward into the cone, forming an outer vortex. The increasing air velocity in the outer vortex results in a centrifugal force on the particles, separating them from the air stream. When the air reaches the bottom of the cone, an inner vortex is created, reversing direction and exiting out the top as clean air while the particulates fall into the dust collection chamber attached to the bottom of the cyclone. In the agricultural processing industry, 2D2D (Shepherd and Lapple, 1939) and 1D3D (Parnell and Davis, 1979) cyclone designs are the most commonly used abatement devices for particulate matter control. The D in the 2D2D designation refers to the barrel diameter of the cyclone. The numbers preceding each D relate to the length of the barrel and cone sections, respectively. A 2D2D cyclone has barrel and cone lengths two times the barrel diameter, whereas a 1D3D cyclone has a barrel length equal to the barrel diameter and a cone length of three times

the barrel diameter. Parnell and Davis (1979) first developed a 1D3D cyclone for cotton gins in an attempt to provide a more efficient fine dust collector. This cyclone design is referred to as the traditional 1D3D cyclone (Fig. 2). Holt and Baker (1999) and Funk et al. (1999) conducted further experimental research on this cyclone design and reported a significant improvement in efficiency by modifying the traditional 1D3D design to employ a 2D2D inlet (Fig. 3). This modified 1D3D cyclone design is referred to as 1D3D in this article.

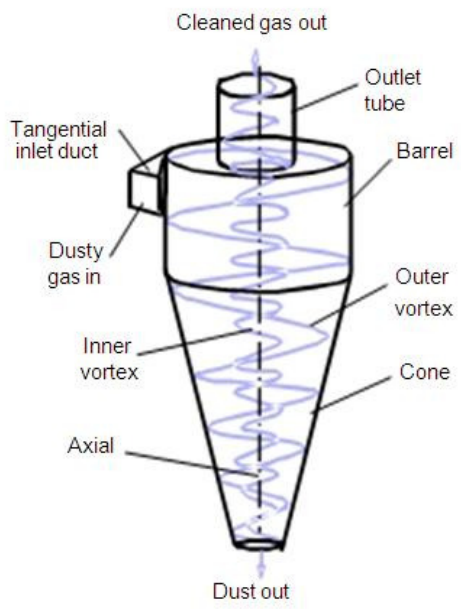

Fig. 1: Schematic flow diagram of a cyclone separator

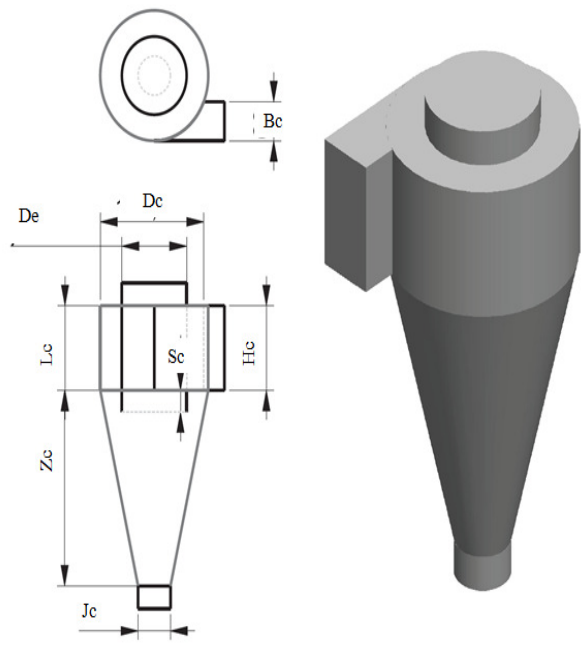

Fig. 2: Design of traditional 1D3D cyclone

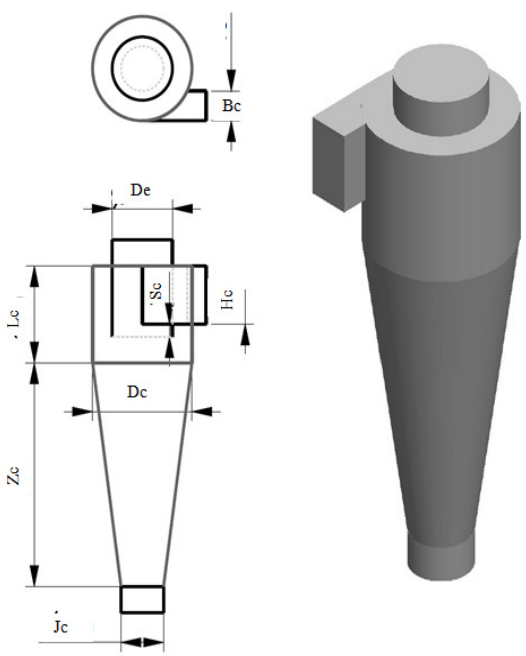

Fig. 3: Design of 1D3D cyclone with 2D2D inlet

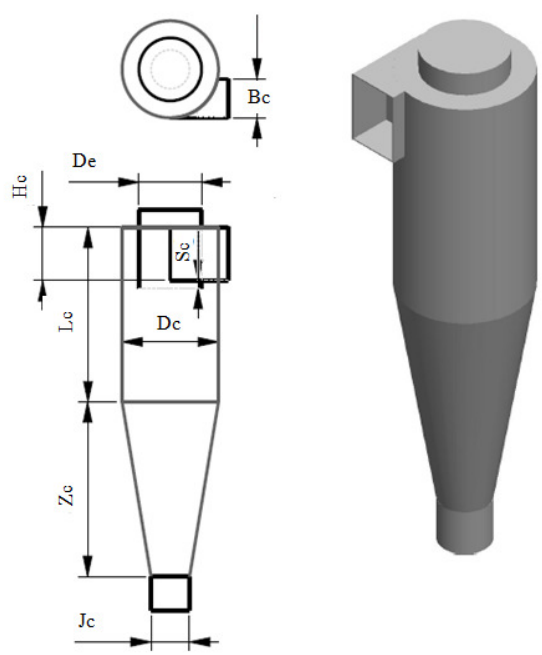

Fig. 4: Design of 2D2D cyclone

The configuration of a 2D2D cyclone is illustrated in figure 4. Previous research (Wang, 2000) indicated that, compared to other cyclone designs, 1D3D and 2D2D are the most efficient cyclone collectors for fine dust (particle diameters less than 100 mm). Mihalski et al. (1993) reported "cycling lint" near the trash exit for the 1D3D and 2D2D cyclone designs when the PM in the inlet air stream contained lint fiber. Further they reported that a significant increase in the exit PM concentration for these high efficiency cyclone designs and attributed this to small balls of lint fiber "cycling" near the trash exit, causing the fine PM that would normally be collected to be diverted to the clean air exit stream. Simpson and Parnell (1995) introduced a new low-pressure cyclone, called the 1D2D cyclones, for the cotton ginning industry to solve the cycling-lint problem. The 1D2D cyclones is a better design for high-lint content trash compared with 1D3D and 2D2D cyclones (Wang et al., 1999). The configuration of 1D2D cyclone is illustrated in figure 5.

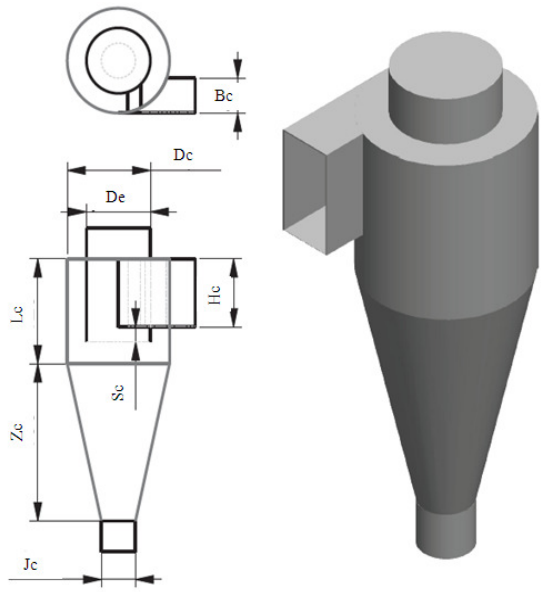

Fig. 5: Design of 1D2D cyclone

2. Literature Summary

The paper consists of a brief characteristic of wheat flour and the work done by various people on wheat flour cyclone separator. The main focus is, to minimize the pollution caused by suspended wheat flour in the air at flour mills by implementation of a cyclone separator. By this we are trying to minimize the pollution in the flour mills.

3. Wheat Flour Mill Cyclone Separator: Review

Jadhav (2014) and Patil (2015) carried out study of design and analysis for flour mill cyclone along with experimental trial. In their study, the characteristics of flour mill cyclone are studied under various flow rates and varying inlet velocities and also its effect on performance parameters like pressure drop, collection efficiency and cyclone efficiency are studied. He carried out the experiment process on two cyclones, one with one symmetrical tangential inlet and another with same dimension of cyclone as the previous one, but with two symmetrical tangential inlets and a single outlet, for the measurement of inlet and outlet velocities (m/s) anemometer is selected. The author has provided connection for measurement of pressure at various points. The pressure is measured by using manometer for carrying out the experiments at various mass flow rates, is obtained by changing the motor (impeller) speed with the help of VFD. After successful completion of experimental trial (symmetric as well as single inlet cyclone) and its CFD simulation (only on symmetric inlet cyclone) using Fluent 6.1 at different velocities, the present paper illustrates that in the single inlet cyclone, the pressure drop is more as compared to symmetrical inlet cyclone. For the single inlet cyclone as the velocity increases the pressure drop also increases. For the cyclone with symmetric inlet, the inlet flow gets divided into two parts. In this, as the inlet velocity increases, the cyclone efficiency also increases. After validation of cyclone with CFD, this paper infers that the performance parameter of symmetrical inlet cyclone is optimum than single inlet cyclone.

Sonaye & Baxi (2012) emphasized performance of a flour mill and related with typical occupational health problems and also measures the particles of flour mill (at Om Flour Mill situated at Bachelor road, Arvi Naka in Wardha, India). The method used in this paper is, Sieve Analysis technique, for estimation of weight percentage of micron sized (light weight and flyable) flour particles. They have also expressed their views regarding unconditional operation of Flour mill under SME (Small and Medium Enterprises); the flying flour should be overcome. The threshold limit value (TLV) recommended by American Conference of Governmental Industrial Hygienists (ACGIH), for reparable dust system is also discussed in the paper. They have selected this method of measuring the particle size because it is simple and has the capability of measuring a wide range of particle size, at a cheaper cost. The test is carried out as per ASTM D44 International using standard sieve analyzer "Tayels". In the present paper, 8 inch diameter sieve is used. A column of different size sieve is placed in a mechanical shaker; this shaker shakes the column, usually for 15-20 minutes. After the shaking is completed, the material on each sieve is weighed. The authors have calculated the percentage retained on each sieve, by using the formula weight of the sample of each sieve divided by the total weight. The paper concludes, by providing alarming situation for SME, the concentration of total flour dust found is 0.952 mg/m3.

Gopani and Bhargava (2011) presented that from automobiles, industries and house hold fuel; burning air pollution is assuming alarming dimensions. As cyclone is cheaper and has a low operating cost, installation of cyclone seems to be a reasonable proposition. Using STAIRMAND method, the present paper aims at designing, high efficiency cyclone, for a tiny cement plant. Against the desired 90% efficiency, which is a safe design for controlling air pollutant concentration in the form of SPM from kiln attached to the cement plant, the designed high efficiency cyclone gives an efficiency of 91.1%. Khairy and Lacor (2010) presented for three Cyclone separators the effect of the cyclone inlet height on the performance and flow field pattern has been investigated computationally using Reynolds Stress turbulence Model (RSM). In this study, results show that, by increasing the cyclone inlet height, the maximum tangential velocity in the cyclone decreases. And the pressure drop decreases, with increasing the cyclone inlet height (but the improvement decreases after a/D = 0.4). In this study, it was observed that by increasing the cyclone inlet height, the cyclone cut-off diameter increases and due to weakness of the vortex strength, the cyclone overall efficiency decreases. Thomas et al. (2004) presented that several factors including design parameters, such as dimensions of cyclone separator, operating temperature and particle density affects the collection efficiency. Operating parameters such as the inlet velocity of the fluid and the physical properties of fluid, namely the density and viscosity and the outlet conditions also affects the collection efficiency of the cyclone. In this paper, the prediction accuracy of four cyclone collection models, namely Koch and Licht, Iozia and Leith, Lapple and Li and Wang are compared. When compared with the presented experimental data, all the predictions proved to be satisfactory. The Li and Wang model could be used in the evaluation of cyclone efficiency because it predicts the cyclone collection efficiency much better than the other three models, with only 3% deviation from the experimental data. With decreasing cyclone body diameter the cyclone efficiency increases. With increasing cyclone inlet width the poor vortex formation inside the cyclone decreases the collection efficiency. Irani & Fong (1961) measured the effect of particle size distribution microscopically on the quality of flour by using gravitational sedimentation (Monsanto-automatized bostock type), sieving and photo-extinction techniques. In this paper, the authors

have discussed the research carried out by Whitby and Heywood. They have used fine sieving mechanism and concluded that sieving can be divided into two different steps, one- having the particle size much smaller than the sieve opening, while the other- is having the particle size close to that of the sieve opening. The present paper gives more attention to Kent Jones et al. technique, which describes the sedimentation procedure, followed by photo sedimentation method, in which the percentage of different sized particle in flour is correlated with the decrease in cloudiness with time. The paper provides the tabulated details of flour sample. Table 1 shows the sedimentation in various solvents like Ethanol, Benzene, Isobutanol, Ethyl-Hexanol of flour size; ranging from 5 to 120 microns. Table 2 (from 5 to 120 micron) and Table 3 (2 to 30 microns), illustrate the comparison values of different methods used. Using the tabulated values, the graph is plotted between percentages of weight on Abscissa, while size of particle in microns on ordinate. The plotted graph concludes that, the percentage weight is less than 10% or larger than 90%, the control limits must be set for each technique independently. The various methods which were calibrated, agree with one another as far as average size and the shape of the distribution curve give results that are significantly different from one another, if only one point in the distribution curve is considered. Therefore, one-point limits, which are agreeable to describe size, should be set independently.

Sullivan et al. (1960) worked to investigate the relationship of particle size and endosperm structure to ash, protein, maltose value, and gassing power as determined from air-classified fractions of flour. The flour was air-classified in an Alpine 132-MP Mikroplex classifier nineteen times. This paper aims, to resolve flour completely into fractions of variable particle size by means of air-classification. Fig. 1 (on page 440), provides classification procedure and vane setting (given in degree and the feed setting is in mm) of 19 classifier. The original flour (labeled sample 1), was passed through the smooth rolls of an experimental Allis mill a total of five times, in order to reduce the flour to a finer average granulation by roll pressure. The same flour was also ground in an Alpine 160-Z pin mill, once at a speed of 17,500 rpm and labeled sample 2. Sample 1 and 2, were ground mainly for comparison of maltose, gassing power, and amylograph data with original flour and they are further analyzed by conventional procedure outlined in cereal laboratory method. The author provides the result in a tabulated form and after mathematical analysis, states that:

- In a very low micron size (under 8 microns), the ash content is roughly, double that of the parent flour.
- From 15 to 30 microns, the ash content increases, probably because the ratio of small endosperm cells and peripheral cells to starch granules increases.
- From approximately 30 to 70 microns, the ash again decreases.
- From 70 to 100 microns and over, the ash in this particle size increases, as there is increase in number of covered and partially covered cells.

4. Conclusion

From the study and analysis of different papers, it is observed that, the pressure drop and cyclone efficiency varies with inlet velocity. The efficiency of cyclone increases with the decrease in dimensions of cyclone body diameter, cyclone width, operating temperature and cyclone width inlet [5]. The pressure drop increases with the increase in inlet velocity; but pressure drop decreases significantly with the rise in temperature [1]. Comparison of performance, between

symmetrical inlet cyclone and single inlet cyclone shows that, symmetrical inlet cyclone is optimum than the conventional cyclone with single inlet [2].

References

[1] Patil, R. (2015). Design and analysis for flour mill cyclone. *IJLTEMAS*. 6(6), pp. 11-14.
[2] Jadhav, MR. (2014). Design of cyclone and study of its performance parameters. *IJMERR*. 3(10), pp. 247-252.
[3] Sonaye, SY, & Baxi, RN. (2012). Particle size measurement and analysis of Flour. *IJERA*. 3(3), pp. 1839-1842.
[4] Gopani, N & Bhargava, A. (2011). Design of High Efficiency Cyclone for Tiny Cement Industry. *International Journal of Environmental Science and Development*. 2(5).
[5] Khairy, E & Lacor, C. (2010). Numerical Study on the Effect of Cyclone Inlet Height on the Flow Pattern and Performance. *In:* Proceedings of 10th International Congress of Fluid Dynamics.
[6] Wang, L, Parnell, CB, Shaw, BW, & Lacey, RE. (2006). A theoretical approach for predicting number of turns and cyclone pressure drop. *ASABE*. 49(2), pp.491-503.
[7] Thomas, JG, Choong, SY, Fakhru'l-razi, A, & Chuah, TG. (2004). Prediction of the Effect of Dimension, Particle Density, Temperature, and Inlet Velocity on the Cyclone Collection Efficiency. *Chemical Engineering and Processing*.
[8] Irani, RR, & Fong, WS. (1961). Measurement of the particle size distribution of flour. *Chem*. 38, pp. 67-75.
[9] Sullivan, B, Engebretson, WE, & Anderson, ML. (1960). The relation of particle size to certain flour characteristics. pp. 436-455.

Appendix

Nomenclature

D = Barrel diameter of Cyclone.
A = Cyclone inlet height (mm).
Dc = Barrel Diameter.
Lc = Length of Barrel.
Zc = Length of cone.
De = Dia. of outlet tube.
Hc = Height of inlet duct.
Bc = Width of inlet.
Jc = Outlet dia. of cone.